Innovative Technology
INTELLIGENCE IN VALIDATION

NV200 Spectral

"The most technically advanced note validator in its class"

- 100% note image capture
  4.8 million datapoints
- 99%+ first time acceptance of new & street grade notes
- Stained note detection
- 2 second note to note processing
- Modular design recycler or ticket printer available

FEATURES

- Full spectral imaging sensors validate the authenticity of notes
- Optical & mechanical anti-strimming technology
- 2 seconds note to note processing time
- 4 way barcode acceptance
- Note centering mechanism
- Internal memory for data logging and SD card for simple updates

BENEFITS

- Unrivalled genuine note detection & protection against fraudulent notes
- Outstanding fraud protection
- Speeds up transaction time & operator profitability
- Increases ticket acceptance rates & user satisfaction
- Exceptional note handling & reliability
- Best in class performance & future proofs your investment

Innovative Technology
INTELLIGENCE IN VALIDATION

Technical Specification

Power
Requirements: 12/24V
Standby: 350/200mA
Running: 1.5A
Peak: 3.5A

Interfaces
USB 2.0
RS232
Open collector
Opto-isolated

MCBF
200,000

Cashbox Options
500 notes
1000 notes

Protocols
SSP
ccTalk

Note Dimensions
Width: 60 - 85mm
Length: 115 - 170mm

Bezel Options
Standard bezel
Metal bezel
Self aligning bezel
Various illumination options

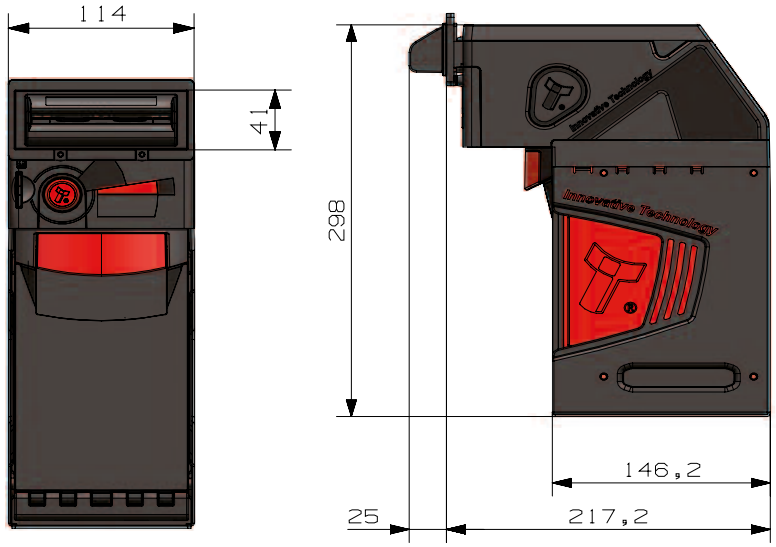

- Weight: 3.2kg

Innovative Technology
INTELLIGENCE IN VALIDATION

Standard Options | NV200 Spectral

Spectral NV200

Cash Box Options

500 Note
SKU: PA02741

1000 Note
SKU: PA02931

Bezel Options

Standard Bezel
SKU: PA00610

82mm Bezel
SKU: PA00634

Metal Bezel
SKU: PA00639

Self Aligning Bezel (Black)
SKU: PA02053

Self Aligning Bezel (White)
SKU: PA01038

	NV200S-101	NV200S-102	NV200S-103	NV200S-104	NV200S-105	NV200S-201	NV200S-202	NV200S-203	NV200S-204	NV200S-205
500 Note Cashbox	●	●	●	●	●					
1000 Note Cashbox						●	●	●	●	●
Standard Bezel	●					●				
82mm Bezel		●					●			
Metal Bezel			●					●		
Self Aligning Bezel (White)				●					●	
Self Aligning Bezel (Black)					●					●

www.innovative-technology.com

For any other combination of bezel/cashbox, please contact our Sales team
sales@innovative-technology.com